INSPECTED AND INVENTORIED BY: _____

PACKED BY: _____

QUANTITY PER BOOTH: _____
BOOTHS REQUIRED: _____
TOTAL QUANTITY: _____

W	B	D	SKID	ITEM	QTY	PART NUMBER	DESCRIPTION	MATERIAL
				2	1	GL2448	CLEAR TEMPERED GLASS, 24X48	-
				3	1	PRX8100	PROXIMITY SWITCH	-
				6	1	GF2752	GLASS FRAME SINGLE SKIN	24 WP

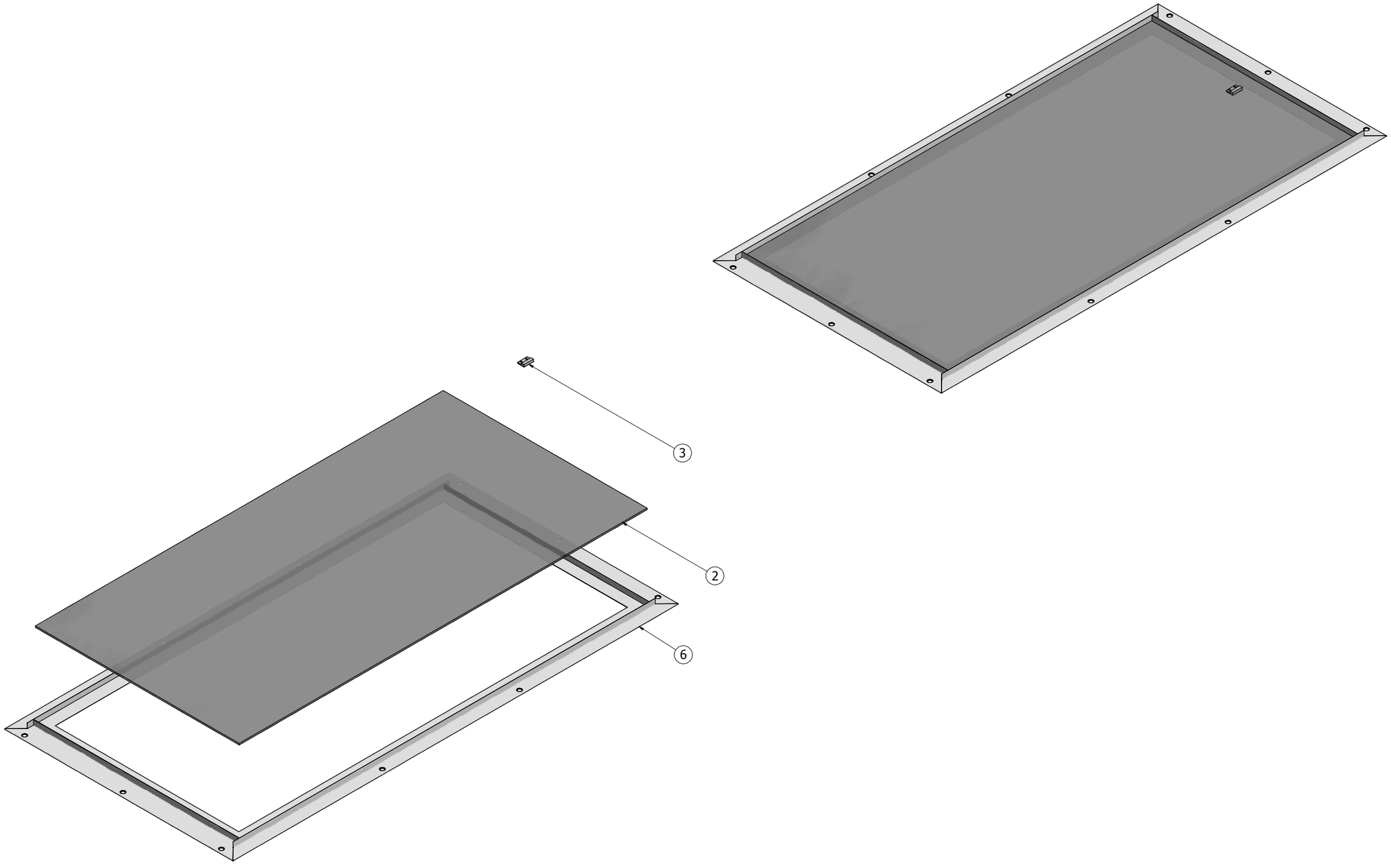

GLOBAL FINISHING SOLUTIONS
12731 NORWAY ROAD
OSSEO, WI 54758 USA
800-848-8738
globalfinishing.com

IMPORTANT NOTE: This print and all information contained therein is the sole property of Global Finishing Solutions, LLC ("GFS"). It is not to be used or reproduced in any manner or submitted to other parties for examination without the express written approval of GFS pursuant to a fully-executed contract or purchase order for GFS-manufactured equipment. Customer may make and retain copies of the print for information and reference in connection with an equipment order; however, this print is not intended or represented to be suitable for re-use by Customer or others on extensions of the order or on any other project. Any use without written verification is at Customer's sole risk and without liability to GFS, its affiliates, or agents.
© Global Finishing Solutions, LLC 2015

REV	DATE	APPROVED	DESCRIPTION
1			

REVISION HISTORY

DESCRIPTION
GF-6
GLASS FRAME-S.SKIN (4-6TUBE)

SCALE | DRAWN BY | DATE | REVIEW BY | DATE

CUSTOMER
FOR

SUBMITTAL SET | REVISION

ORDER / SERIAL NUMBER

SHEET
of